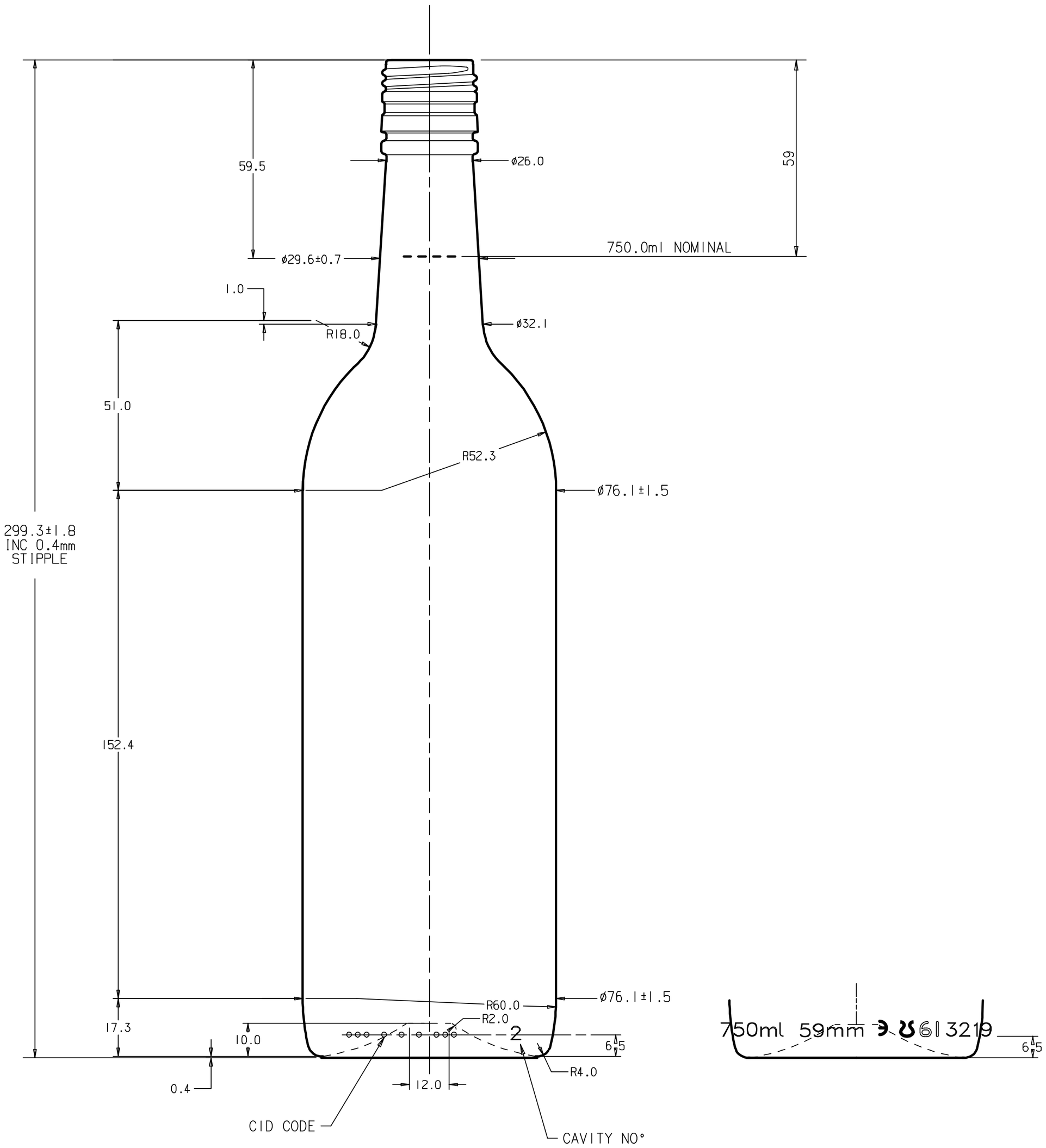

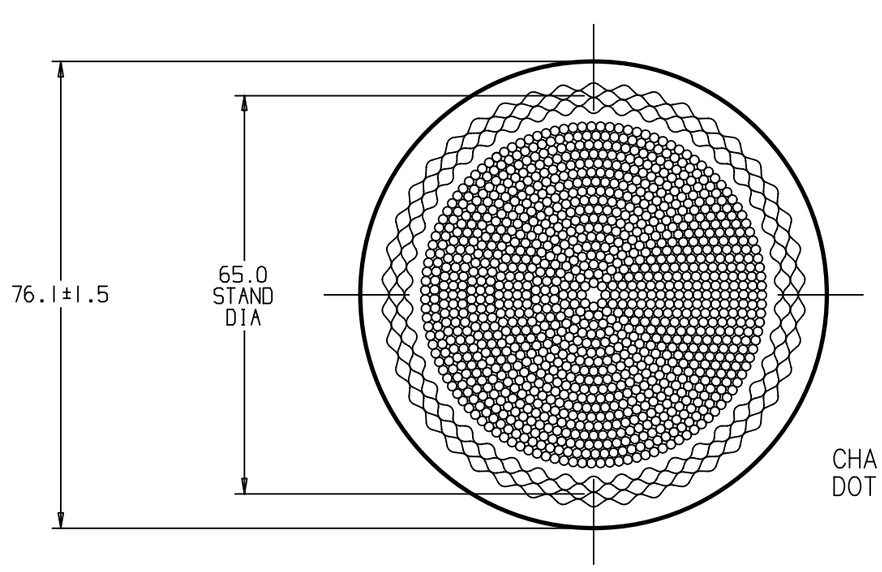

CHAIN STIPPLE ON STAND DIAMETER
DOT STIPPLE OVER THE P/UP

NOMINAL CAPACITY	750.0ml ± 5.6ml ℮ ±10.0ml
VACUITY	20.0ml (2.7%)
FILL LEVEL	59mm
FINISH	RF30182 - BVS 30H 60 CETIE GME 30-13
MINIMUM THROUGH BORE	17.0mm
WEIGHT NOMINAL	460g
GLASS COLOUR	FLINT / GREEN
TILT ANGLE	-
USAGE	NON RETURNABLE
MAXIMUM CARBONATION (GAS VOLUMES AT 20°C)	N/A

SPECIFICATION AGREEMENTS ARE BASED ON TOLERANCED DIMENSIONS ONLY
DO NOT SCALE DRAWING
COPYRIGHT RESERVED, NOT TO BE COPIED IN WHOLE OR PART WITHOUT WRITTEN PERMISSION FROM ARDAGH GLASS LTD.

ALL DIMENSIONS ARE IN MILLIMETERS

	REVISION		DATE	CHK	DRC
F					
E					
D					
C					
B	BASE STIPPLE CHANGED FROM BAR TO CHAIN DOT STIPPLE ADDED ALL OVER THE P/UP	TB	31/10/08	SG	TB
A	COPIED FROM REDFEARN SPEC 3219/A6580, FINISH UPDATED	AM	18-06-07	TB	DB

ArdaghGlass UNITED KINGDOM

DESIGNER AM	DATE 18-06-07	SHEET 1 OF 1
CHECKED TB	D.R.C. DB	SCALE 1:1
CUSTOMER NON PROPRIETARY		A2

750ml BORDEAUX WINE

SAP No - REF No -

CONTAINER No 3219-B-50