DRG No 8038-C-50

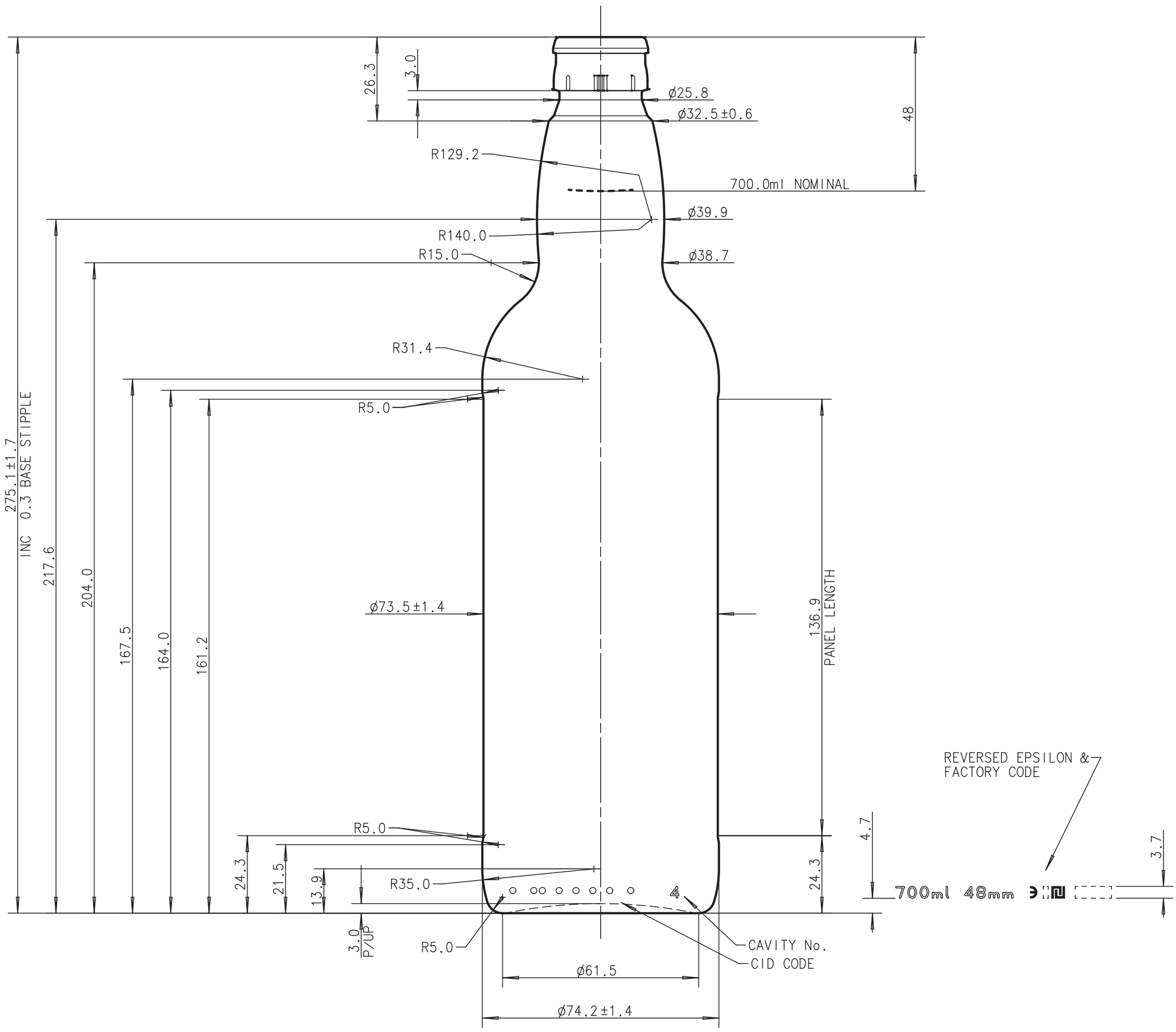

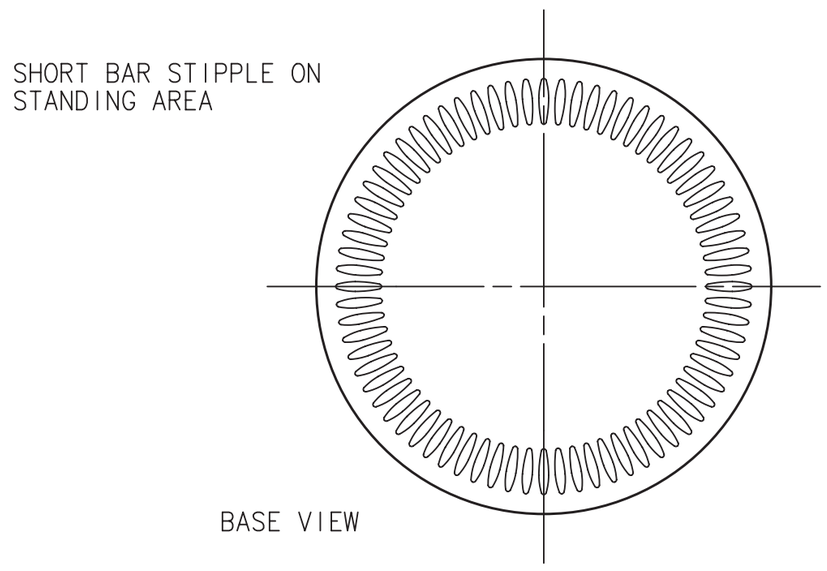

NOTES:

INSWEEP LETTERING TO BE 0.3 MAX PROUD AND ROUND BOTTOM STYLE.

ALL DIMENSIONS ARE IN MILLIMETERS

GLASS COLOUR	MULTI
VACUITY	23.0ml (3.3%)
FILL LEVEL	48mm

MEASURING CONTAINER	
MINIMUM THROUGH BORE	17.0
TILT ANGLE	16.3°
MAXIMUM CARBONATION (GAS VOLUMES)	N/A

	REVISION		DATE	CHK	DRC
G					
F					
E					
D					
C	MINIMUM THROUGH BORE UPDATED FROM 16.3 TO 17.0	AM	20/06/06	TB	DB
B	BASE MARKINGS MOVED TO THE INSWEEP	TB	18/11/05	TB	DB
A	SP-0700-0189 CONVERTED TO WARE SPEC.CAVITY No MOVED FROM BASE TO INSWEEP.C.TURPIN.		20-3-97	JH	AMB

NOMINAL CAPACITY	700.0ml ± 5.2ml	℮ ± 10.0ml
WEIGHT NOMINAL	385g	
FINISH	RF29739 - GUALA 1031/47	
SURFACE TREATMENT	HOT END - YES	COLD END - YES

SPECIFICATION AGREEMENTS ARE BASED ON TOLERANCED DIMENSIONS.
DO NOT SCALE DRAWING.
COPYRIGHT RESERVED, NOT TO BE COPIED IN WHOLE OR PART WITHOUT WRITTEN PERMISSION FROM ARDAGH GLASS LTD.

ArdaghGlass

70cl NNPB GUALA

CUSTOMER.	NON PROPRIETARY
DRAWN. S.M.	DATE 21-02-97
CHECKED. A.B.	D.R.C. A.B.
SCALE	DRAWING No A2
FULL SIZE	8038-C-50